CLASSIC CHESSBOARD

	NO.	ITEM	DIMENSIONS (INCHES) T	W	L	MATERIAL
❑	4	Strips	9/16	2	17*	Maple
❑	4	Strips	9/16	2	17*	Walnut
❑	4	Chessboard splines	1/4	1/2	17	Walnut
❑	4	Box sides	3/4	3 5/8	17 3/4	Walnut
❑	4	Miter splines	1/8	1/4	3 5/8	Walnut
❑	1	Bottom	1/4	16 3/4	16 3/4	Plywood
❑	2	Base	3/4	1 5/8	18	Walnut

* The length is correct; the additional inches needed for saw kerf.

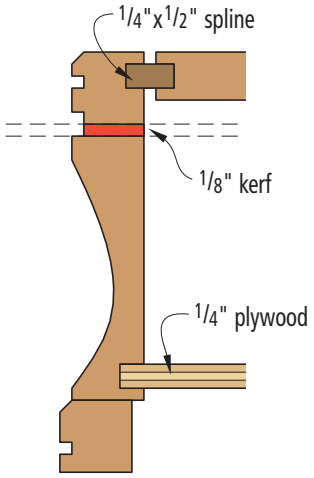

Half-size section detail

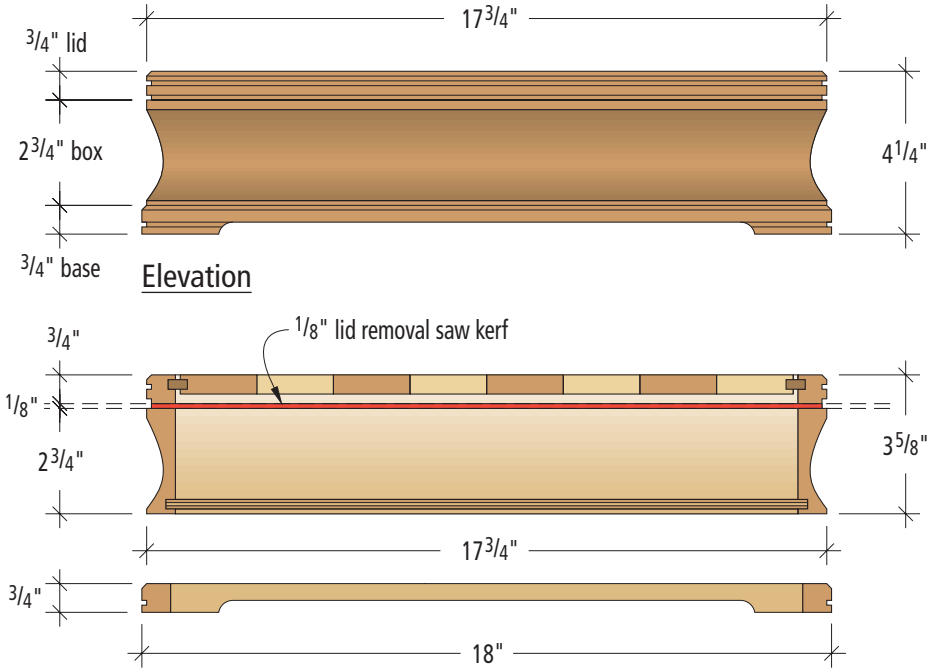

Lid, box & base sections

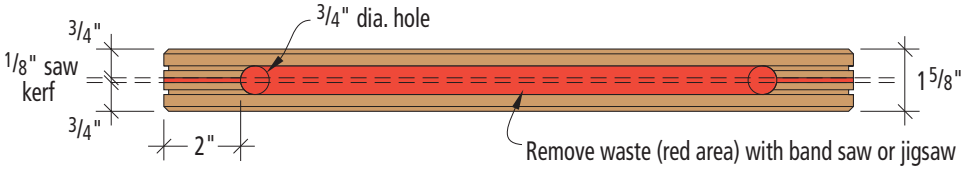

Base stock plan

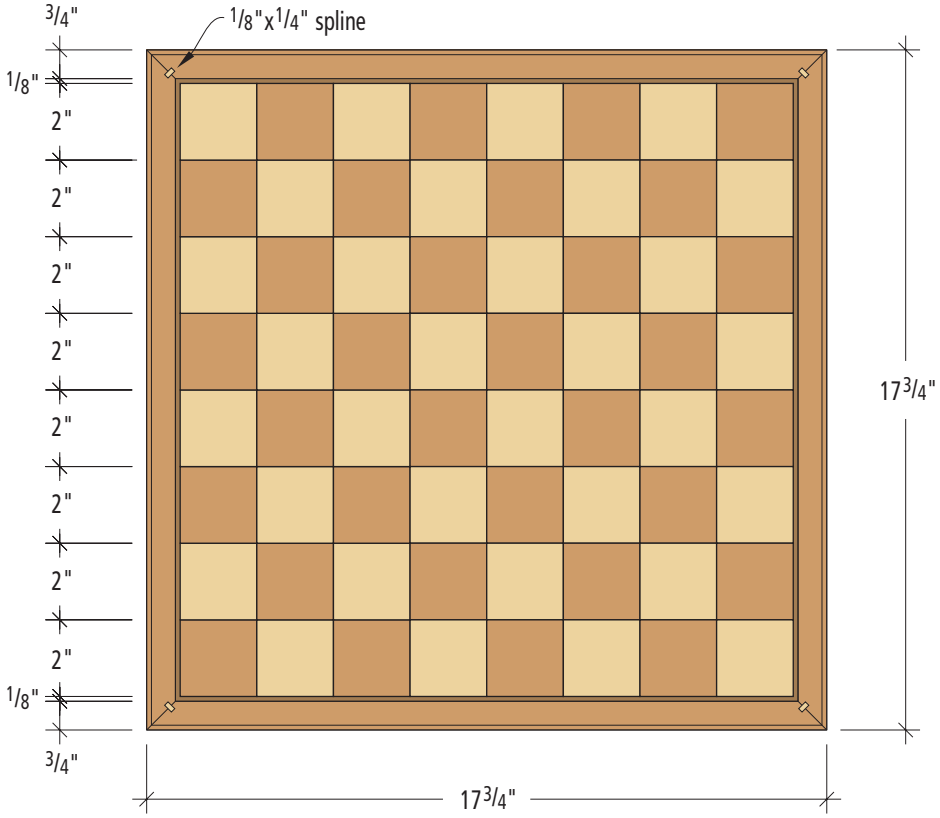

Plan